Why is the Just Stop Oil group also against nuclear powered energy as an alternative to fossil fuel?

Vin Yasi
Self-taught hobbyist at Electrical Engineering (2013–present) · 39m

Because it's a good idea to pursue other objectives (if we can agree on their pursuit ;-) ...

> *How to replace our dependency upon traditional fuels (fossil, nuclear, coal, etc) is to recognize that the ambient energy (measured in microvolts) surrounding the earth's trees and flowers, etc, is sufficient to power all of our needs.*

Reduce our use of Real Power and Recycle our use of Reactive Power inherent within every circuit.

Our only mistake is to ignore this "free(ly available) source of energy" by refusing to liberate it with a catalyzing tickle of starvation. Yet, we repress this "free energy" by assuming that there is "no such thing as a free lunch" and (thus, we) smother our appliances with more energy than they require to operate (to cover their losses) and fulfil (by way of circular reasoning) that Conservation of Energy is a law.

Yet, Conservation of Energy is not a law; it is merely a policy in need of slaves (that's us!) to uphold it.

Conservation of Energy is a hypothesis - not a law - since it is predicated upon the analysis of isolated systems of energy which (itself) is a mere hypothesis.

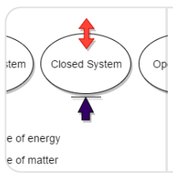

Isolated system - Wikipedia
Physical systems that don't interact with other parts of the universe Properties...
https://en.wikipedia.org/wiki/Isolated_system

"... strictly and ideally isolated systems do not actually occur in experiments or in nature. Though very useful, they are strictly hypothetical."

We cannot predicate a law upon a hypothesis and expect that this law can arise, by way of logical reasoning, from its foundational hypothesis without the need for additional equivocation. Physicists assume that a stable system of energy is this additional equivocation (according to the Wikipedia article cited, above). Yet, stable systems of energy do not exist within the domain of unstable systems of energy which are intended (by way of their design) to over-react and, thus, destabilize themselves by spawning an OUTPUT which does not equal their INPUT. This inequality is spawned by ...

... the infrequent reversals of time, under General Relativity, which is a fact of electrical engineering called: transients, plus ...

... the shrewd conservation of reactive power and the severe reduction of the expenditure of real power spawning free energy courtesy of the negative impedance of Foster's Reactance Theorem: aka, the potential over-reactance of the valence shell electron volts which atomically binds matter and holds it together in the shape of solid objects. These valence electron volts are where "free energy" comes from.

But, there are *rules* to follow if this energy is to be liberated. And, starvation of a circuit is one of them.

Surf to: Welcome to my Contest to See Who Can Build my Overunity Circuit? | Magical Me

Or, its shortcut: h t t p s : / / t i n y u r l . c o m / o u c o n t e s t

Vinyasi, independent research; activist.

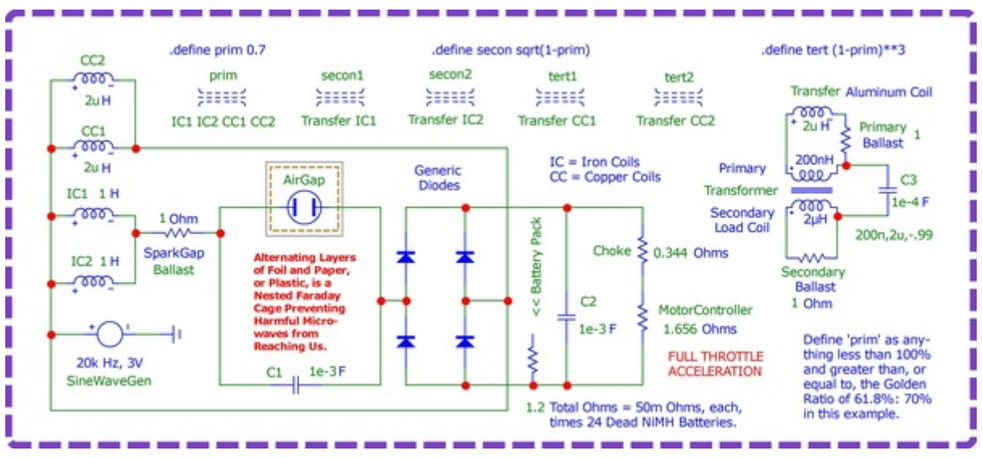

Schematic of a simulation of an Overunity Circuit supplying sufficient power for a 2002 RAV4EV at Full Throttle Acceleration with its battery pack disconnected at one of its terminals to prevent its use. Here is its projected Input versus its Output and their Ratio of Coefficience of Performance: a whopping 12.6 Giga to One! ...

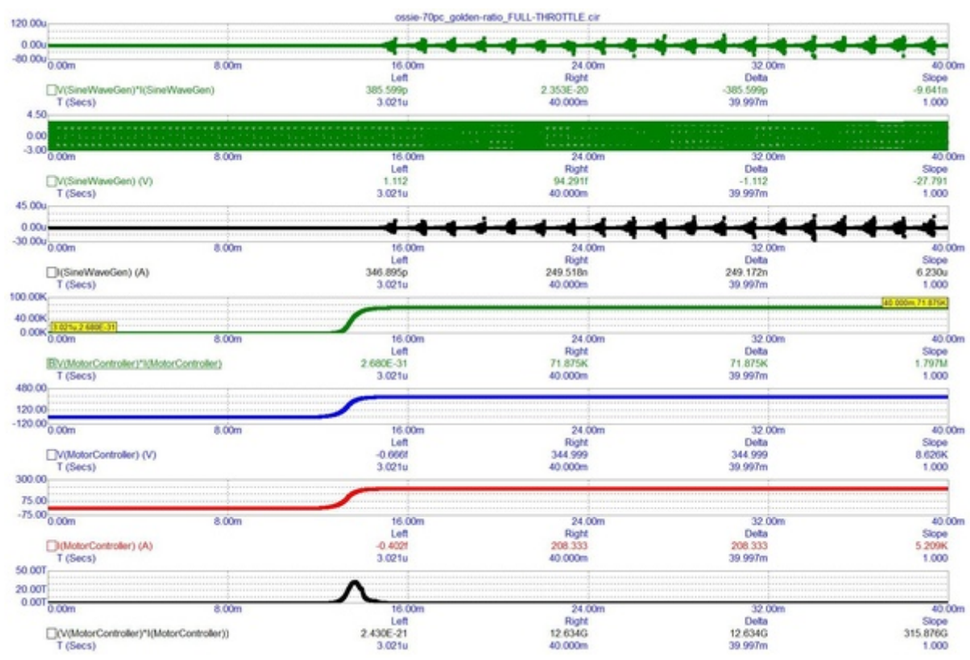

2 views

View **24** other answers to this question

About the Author

Vin Yasi
Self-taught hobbyist at Electrical Engineering 2013–present
AA from Santa Monica, CA Graduated 1991
Lives in Southern California 1957–present
480K content views 5.3K this month
Active in 19 Spaces
Knows English

More answers from Vin Yasi — View more

Has anyone tried to recreate Joseph Newman's perpetual motion machine?
14,867 views

Does blood electrification work?
1,322 views

What is the difference between a disease and an addiction?
782 views

Why did the government cover-up Nikola Tesla's greatest inventions, like the magnetic-powered UFO he came up with? If the inventions weren't covered up, would the world have been more advanced by now?
1,127 views

Is it possible to use a capacitor as a battery?
3,663 views